Electrolux PROFESSIONAL

ITEM #

MODEL #

NAME #

SIS #

AIA #

Frozen

Frozen granita dispenser with 2 bowls, mechanical control with UK Plug and UV light

562542 (IPRO2MUVR290) * NOT TRANSLATED *

Main Features

- The ITANK ™ Technology prevents ice accumulation on the outer side of the bowl, reducing condensation and increasing the cooling power of the machine.
- Bowl shape allows a natural mixing action to ensure an optimum consistency of the product.
- Customizable lid merchandiser and back graphic.
- Ideal for operators who want an innovative and distinctive equipment. Mechanical keypad allows for setting of cooling and defrost modes.
- The insulated tank guarantees higher cooling efficiency and lower effect of the external temperature on product's preparation and maintenance time reducing condense and draining; it is the best solution in hot climate conditions.
- Exclusive nUV LED system for bowl sanitation.

Construction

- Electromechanical control.
- Sliding drip tray.

APPROVAL:

Front

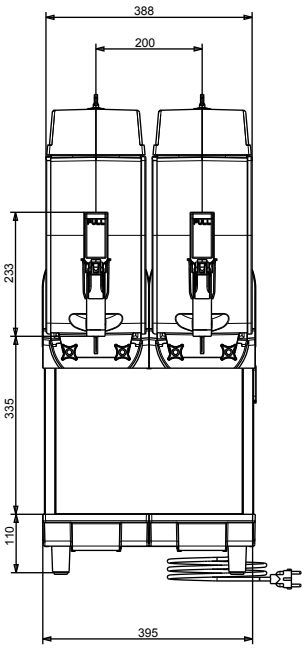

Side

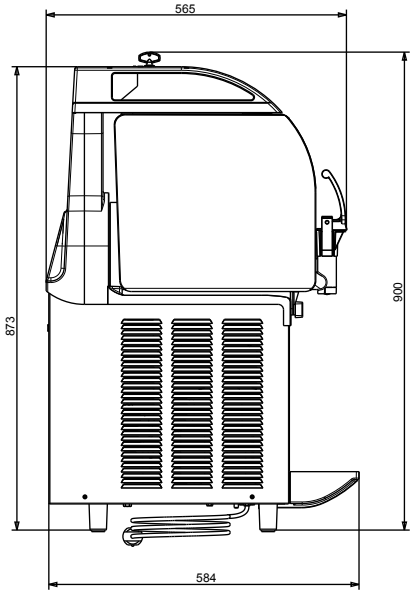

Top

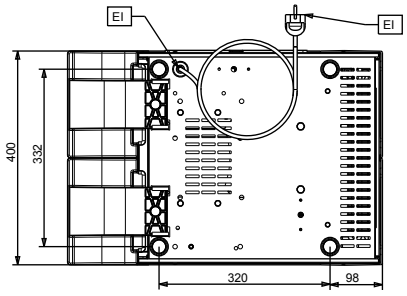

The company reserves the right to make modifications to the products without prior notice. All information correct at time of printing.

Electric

Supply voltage:	220-240 V/1 ph/50 Hz
Electrical power max.:	0.81 kW

Key Information:

Net weight:	60 kg

Sustainability

Refrigerant type:	R290
Refrigerant weight:	106 g

The company reserves the right to make modifications to the products without prior notice. All information correct at time of printing.